Unusual Properties of a Field Formed by Low-Level Laser Radiation Used in Therapy of Infection Pathology Including Hepatitis C Virus and a New Coronavirus Infection

Naylya Djumaeva, M.D., Ph.D.
Neurologist,
Expert in “Medicament testing”
Scientific-Research Institute of Virology,
Uzbekistan

РОССИЙСКАЯ ФЕДЕРАЦИЯ

ПАТЕНТ

НА ИЗОБРЕТЕНИЕ

№ 2163491

Российским агентством по патентам и товарным знакам на основании Патентного закона Российской Федерации, введенного в действие 14 октября 1992 года, выдан настоящий патент на изобретение

УСТРОЙСТВО ДЛЯ ДИСТАНЦИОННОГО ПЕРЕНОСА ИНФОРМАЦИИ С ЛЕКАРСТВЕННОГО ПРЕПАРАТА НА ОРГАНИЗМ ЧЕЛОВЕКА

Патентообладатель(ли):

см. на обороте

по заявке № 9810893в, дата поступления: 13.05.1998

Приоритет от 13.05.1998

Автор(ы) изобретения:

Казначеев Владиль Петрович, Трофимов Александр Васильевич, Шатарнин Антон Юрьевич

Патент действует на всей территории Российской Федерации в течение 20 лет с **13 мая 1998 г** при условии своевременной уплаты пошлины за поддержание патента в силе

Зарегистрирован в Государственном реестре изобретений Российской Федерации

г. Москва, ***27 февраля 2001 г.***

Генеральный директор

А.Д. Корчагин

Patent of the Russian Federation.RU 2163491 "Device for Remote Transfer of Information from Medicine to Human Body“, 2001.

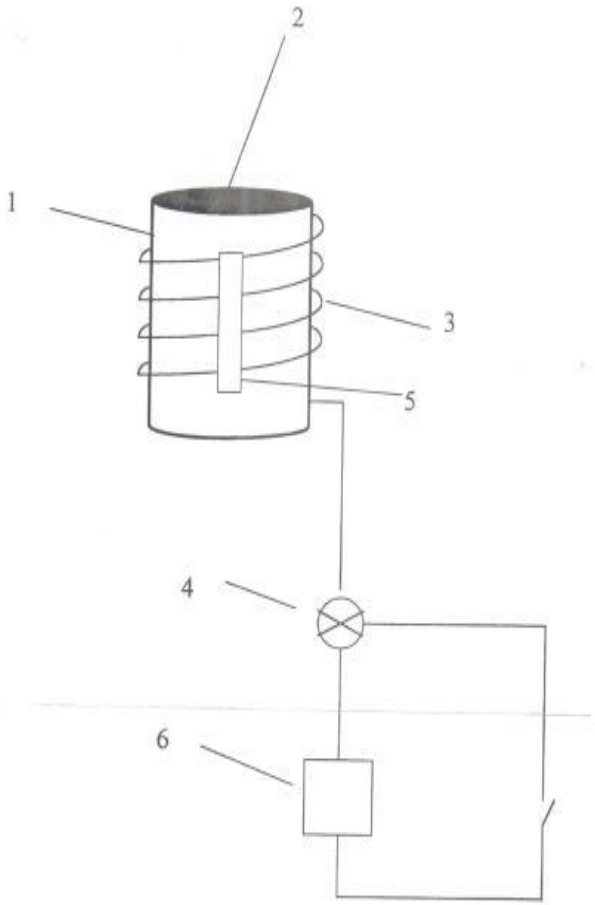

Device diagram

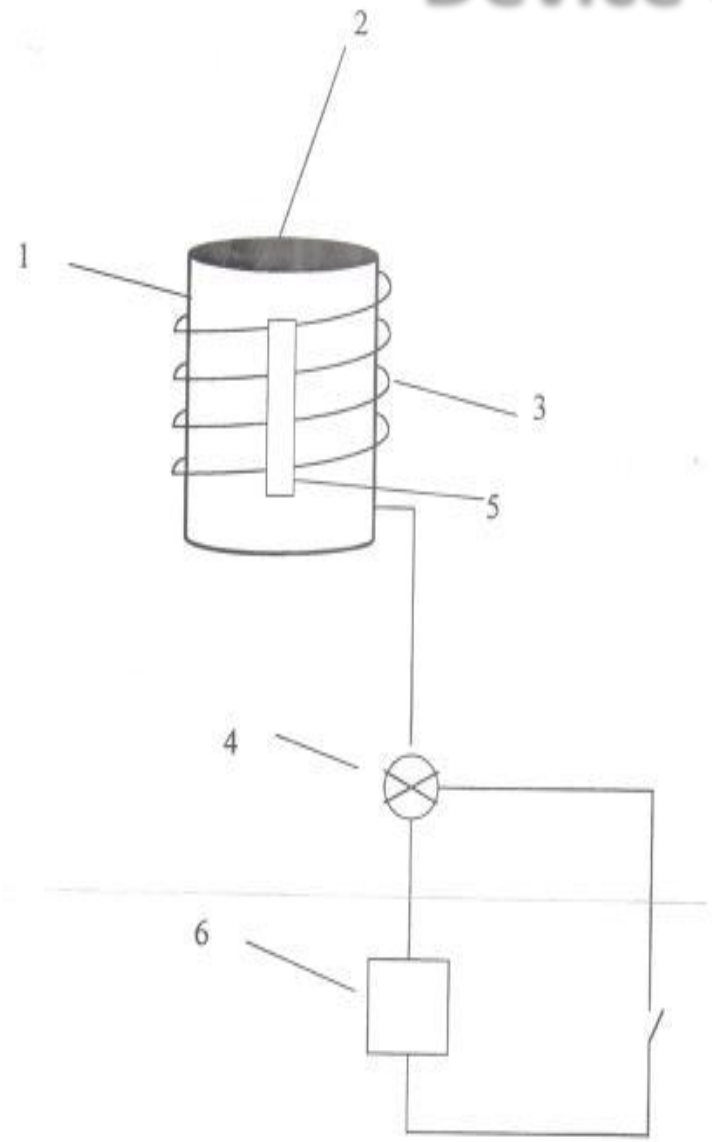

The device consists of a hollow closed 2 cylinder 1 made of non-conductive material (cardboard) around which, on the outer surface, a light guide 3 goes in a spiral, connected to a light source 4;

a drug is places inside the cylinder 5.

a light source 4 is connected to power supply 6

Device for remote transfer of medicine properties into human body

This device was created by connecting a waveguide to a low-level continuous semi-conducted diode red laser with wavelength=650nm, the free end of which is wrapped around the cardboard in a spiral forming a cylinder. The dimensions of the cylinder are 8 cm in height and 12 cm in diameter. The number of turns is 22. We used a single-mode optical fiber as a light waveguide. The laser power reaches 3mW .The device completely follows Russian patent RU 2163491 "Device for Remote Transfer of Information from Medicine to Human Body" dated February, 2001. Authors are Kaznacheev VP, Trofimov AV and Shatarnin AY.

Numerous studies on the study of the properties of the device performed by the authors of the patent in-vitro and in- vivo can be found in the monographs of the authors:

1.*Kaznacheev V.P., Kiselnikov A.A. and Mingasov I.F. (2005) Noo-spheric Ecology and Human Economics: Problems of the "Sphinx of the XXI Century. Novosibirsk,447 p. [in Russian].*

2.Kaznacheev V.P. and Trofimov A.V. (2004) Essays on the Nature of Living Matter and Intelligence on Planet Earth: Problems of Cosmoplanet. Anthropo-ecology.In: Kaznacheev V.P. and Trofimov A.V., Eds., Science, 293-312. [in Russian]

2004(March)-start of therapy

2005(November) - completion of therapy

A 25-year-old patient had a history of appendectomy followed by the formation of a chronic septic condition and pus formations in various organs and tissues of the body for the last 11 years

The following microorganisms were determined on the purulent wound surface:

1.Staphylococcus spp

2.Proteus mir.

3.Pseudomanas aeur.

4. Candida spp.

5.Clostridium perf.

The results of therapy of patients with chronic hepatitis C virus infection (Sofosbuvir + Daclatasvir)

Comparison of the duration of therapy using the proposed method and traditional method of using antiviral drugs(CHCV infection)

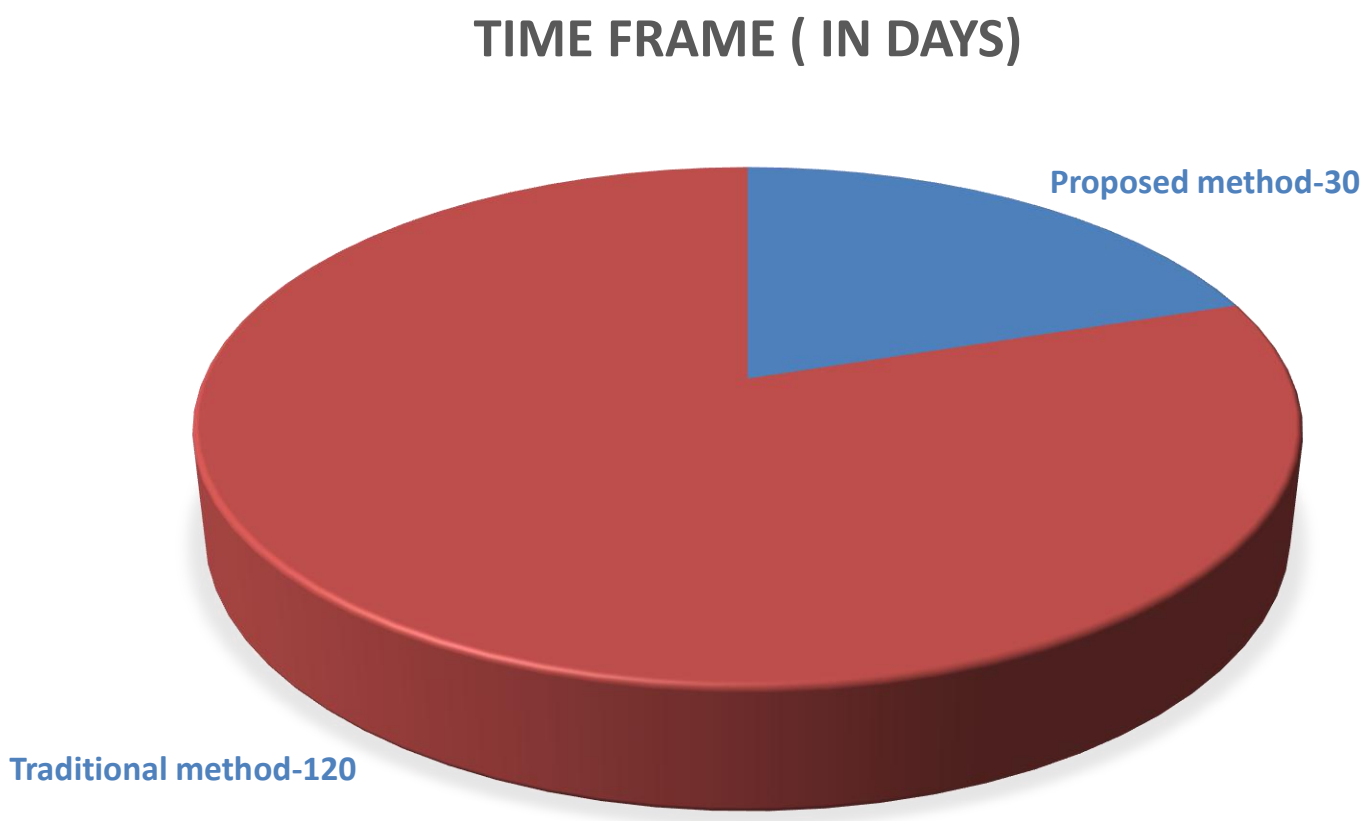

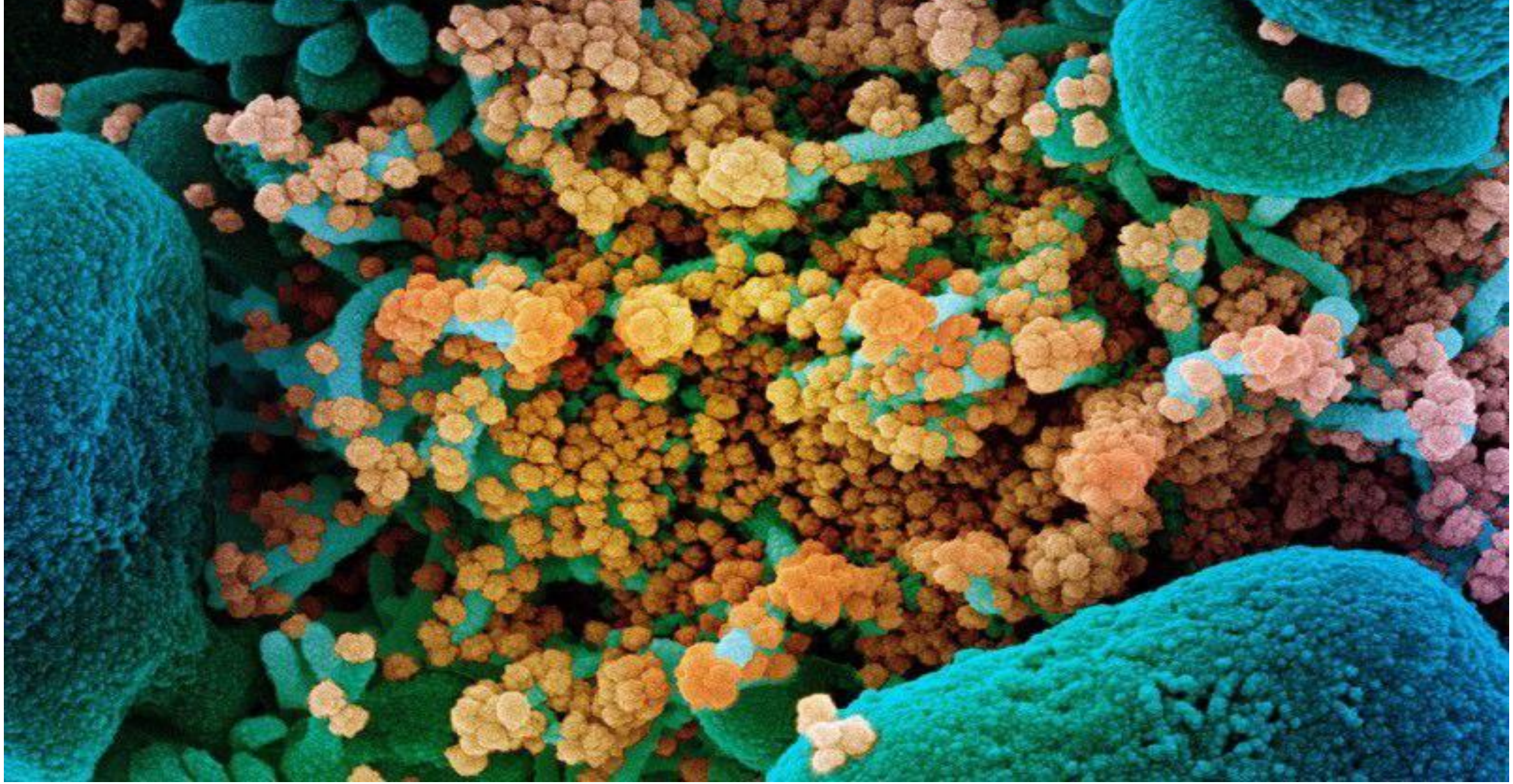

Electron microscopy: SARS-CoV-2 particles (orange) on a cell (cyan)(J.“Nature”,July 2022)

Results of treatment of patients with acute coronavirus infection (Covid-19 interstitial pneumonia)(Ribavirin)(n-12)

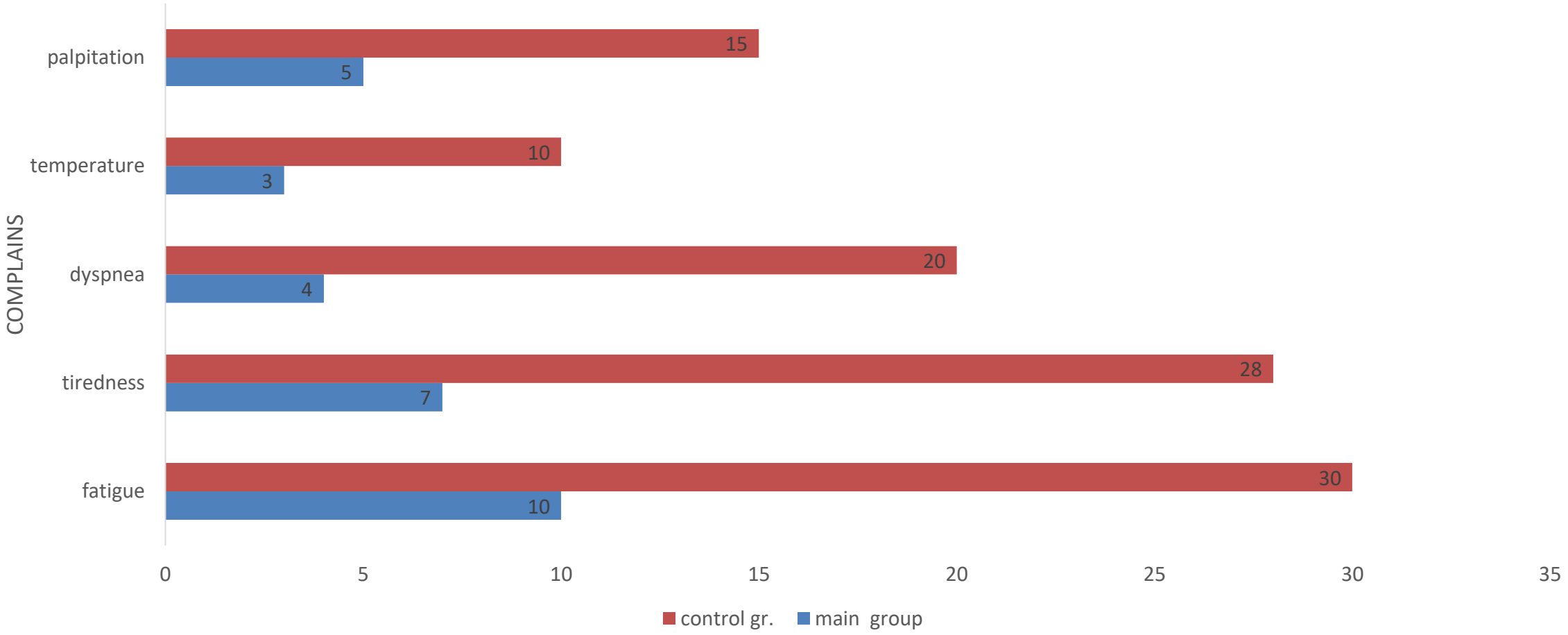

Djumaeva N. "New Approaches to Diagnosis and Therapy of Covid-19"
International Journal of Scientific & Engineering Research, Volume 11, Issue 9, September 2020

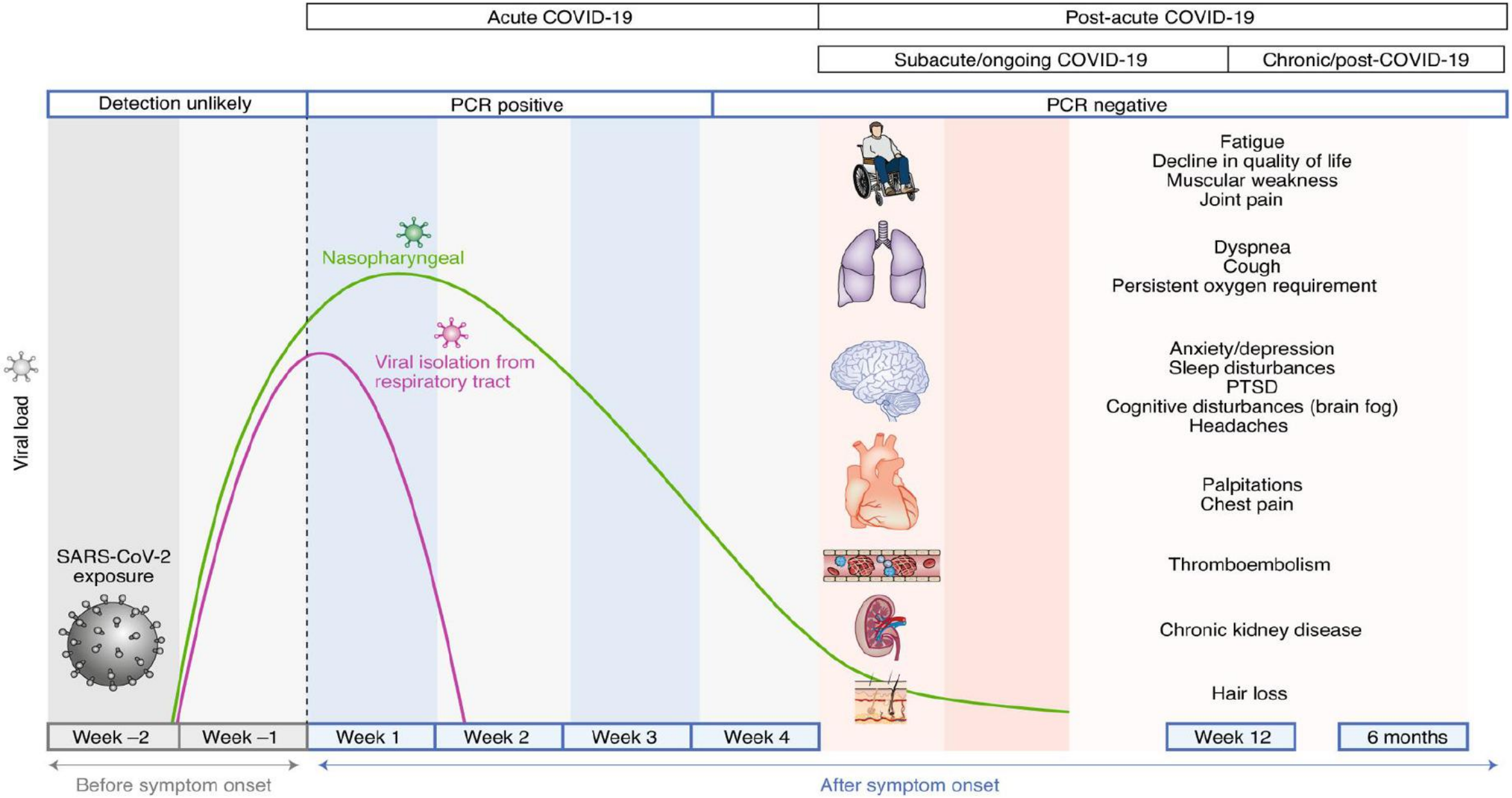

Nalbandian A, Sehgal K, Gupta A, Madhavan MV, McGroder C, Stevens JS, Cook JR, Nordvig AS, Shalev D, Sehrawat TS, Ahluwalia N. Post-acute COVID-19 syndrome. Nature medicine. 2021 Apr;27(4):601-15)

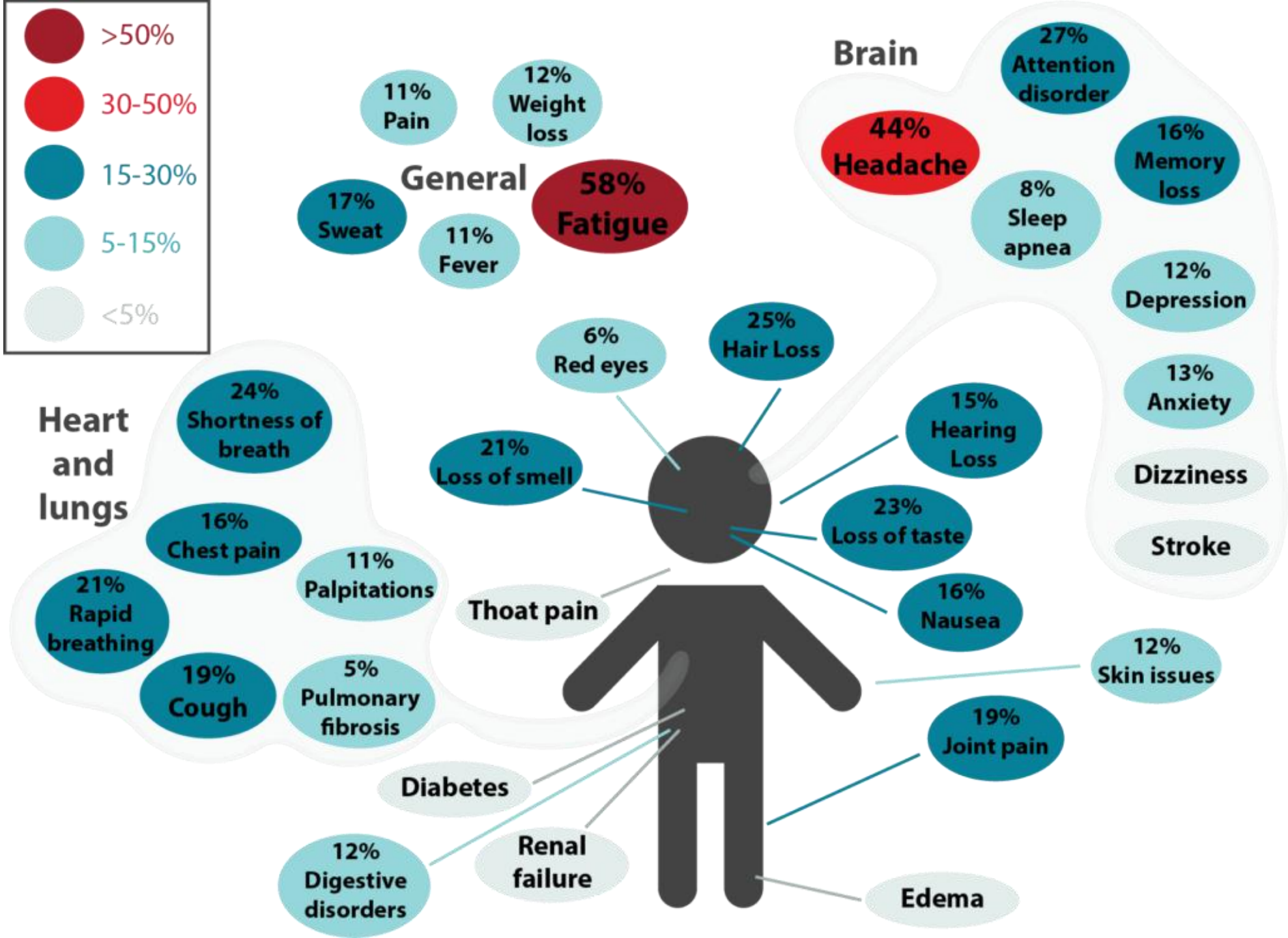
>50%
30-50%
15-30%
5-15%
<5%
General
58% Fatigue
11% Pain
12% Weight loss
17% Sweat
11% Fever
Brain
44% Headache
27% Attention disorder
16% Memory loss
8% Sleep apnea
12% Depression
13% Anxiety
Dizziness
Stroke
6% Red eyes
25% Hair Loss
15% Hearing Loss
21% Loss of smell
23% Loss of taste
16% Nausea
Thoat pain
12% Skin issues
19% Joint pain
Edema
Heart and lungs
24% Shortness of breath
16% Chest pain
11% Palpitations
21% Rapid breathing
19% Cough
5% Pulmonary fibrosis
Diabetes
Renal failure
12% Digestive disorders

Dynamics of neurological symptoms of Long-Covid syndrome in the main group(n-54) of patients(Ribavirin)

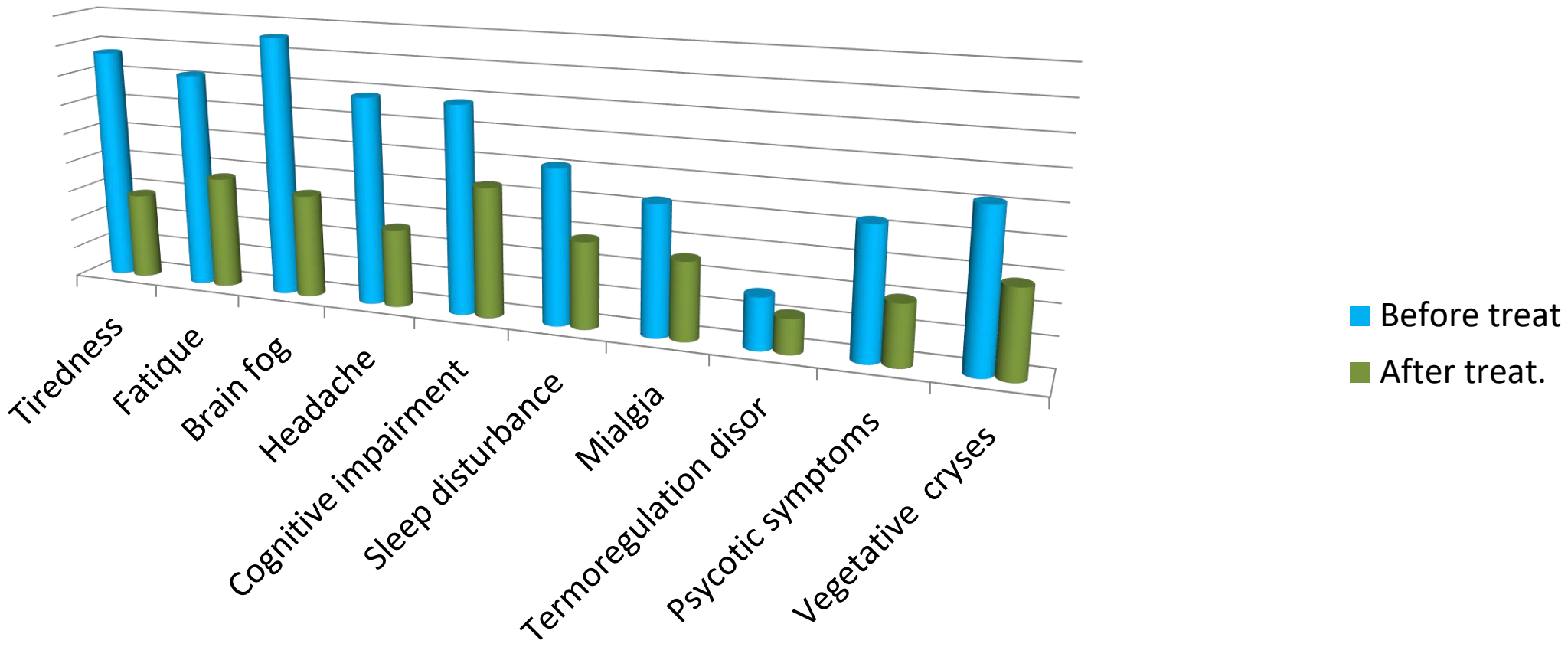

Dynamics of neurological symptoms of Long-Covid syndrome in the control group(n-20) of patients(placebo)

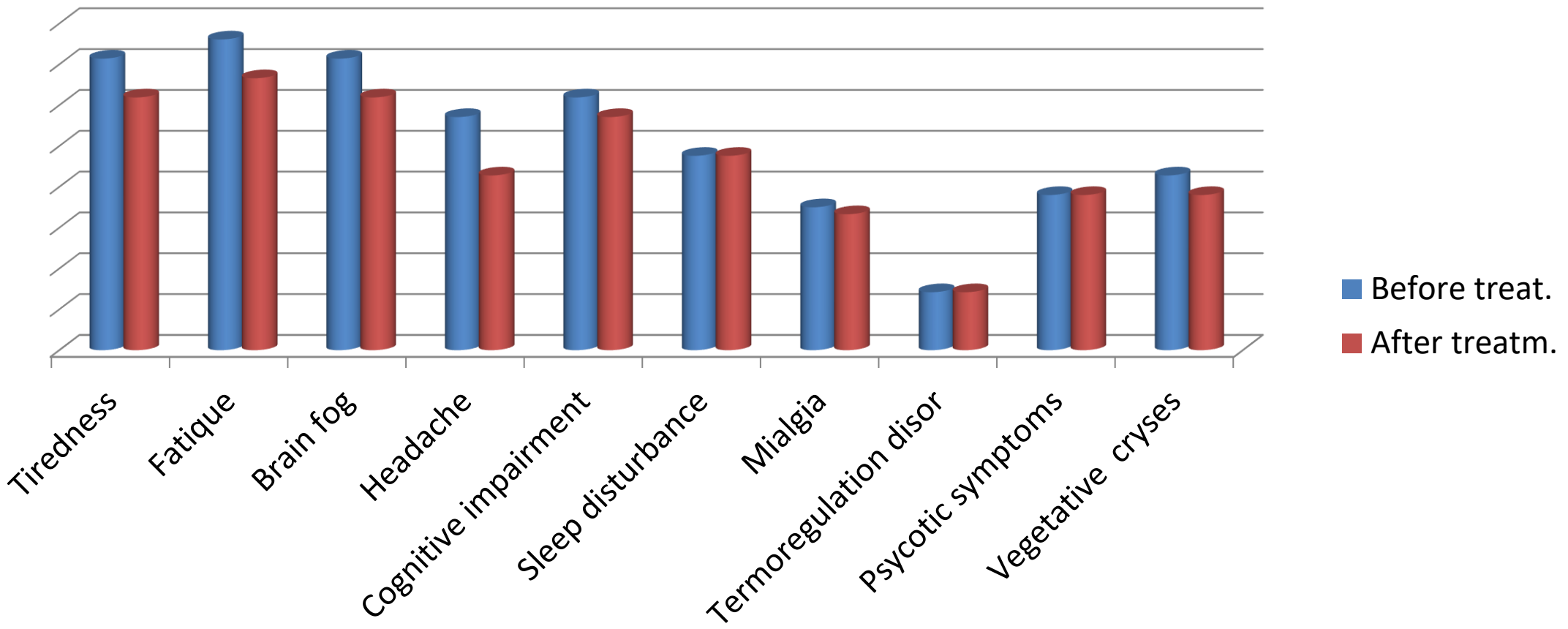

Djumaeva N. Application of Well-Known Antiviral Drugs in the Field Formed by the Unexplained Properties of Low-Level Laser Radiation in Therapy of Covid-19 and Chronic Viral Hepatitis. Optics and Photonics Journal, 2021, 11, 430-440

Djumaeva N. New approaches to diagnosis and therapy for Covid-19. International Journal of Scientific and Engineering Research.11(9), 2020

Djumaeva N. Application of un-usual properties of low- level laser radiation for transfer information from medicine to patient's body in therapy of patients with some viral diseases.7th International Conference on Applied Physics and Space Science.August 17-18, 2020.p.11-12

Djumaeva N., Khusainov I. Application of torsion fields in therapy of some viral diseases in patients with different chronic conditions. International Journal of Unconventional Science,, 2018,#19-20(Russia)

Djumaeva N., Khusainov I.," Results of therapy of tested doses of Ribavirin with application of unknown properties of low level laser radiation in patient with chronic hepatitis C virus infection Genotype 2: case report and literature review. J.Science of Healing Outcomes.2015,7(26),pp.6-12

DjumaevaN, Musabaev E,Khusainov I. Application of unusual field of low level laser radiation in the treatment of patient with chronic hepatitis C virus infection: case report and literature review. Journal of the Science of Healing Outcomes.2014,6,(22), p.5-10

Djumaeva N." The new approach to treatment of patients with chronic hepatitis C virus infection by use of the PSI-K effects of low level laser radiation applying to the points of acupunctures" Australasian Acupuncture &Chinese Medicine Annual Conference, Adelaide, Australia,2010.

N.A. Kozyrev -a Soviet Russian astronomer and astrophysicist.

A Kozyrev mirror is a device which is made from aluminum plates forming a spiral , which is able to focus different types of radiation like magnifying glasses, including the types of radiation coming from biological objects.

Patent of the Russian Federation.RU 2122446.1998

Device for correction of human psychosomatic diseases

РОССИЙСКАЯ ФЕДЕРАЦИЯ

РОССИЙСКОЕ АГЕНТСТВО ПО ПАТЕНТАМ И ТОВАРНЫМ ЗНАКАМ

ПАТЕНТ

НА ИЗОБРЕТЕНИЕ

№ 2122446

На основании Патентного закона Российской Федерации, введенного в действие 14 октября 1992 года, Российским агентством по патентам и товарным знакам выдан настоящий патент на изобретение

УСТРОЙСТВО ДЛЯ КОРРЕКЦИИ ПСИХОСОМАТИЧЕСКИХ ЗАБОЛЕВАНИЙ ЧЕЛОВЕКА

Патентообладатель(ли):

Международный институт космической антропоэкологии

по заявке № 96113190, дата поступления: 02.07.96

Приоритет от 02.07.96

Автор(ы) изобретения:

Казначеев Владимир Петрович, Трофимов Александр Васильевич

Патент действует на всей территории Российской Федерации в течение 20 лет с **2 июля 1996 г.** при условии своевременной уплаты пошлины за поддержание патента в силе

Зарегистрирован в Государственном реестре изобретений Российской Федерации

*г. Москва, **27 ноября 1998 г.***

Генеральный директор

А.Д. Корчагин

Mirrors Kozyrev used in scientific and experimental work is a device that forms a working space from aluminum plates 1.5 mm thick, up to 280 cm high, 120 cm wide, with a polished surface and with a curvature that provides the focus of the working surface and are interconnected in the form of a cylindrical or spiral reflective structure.

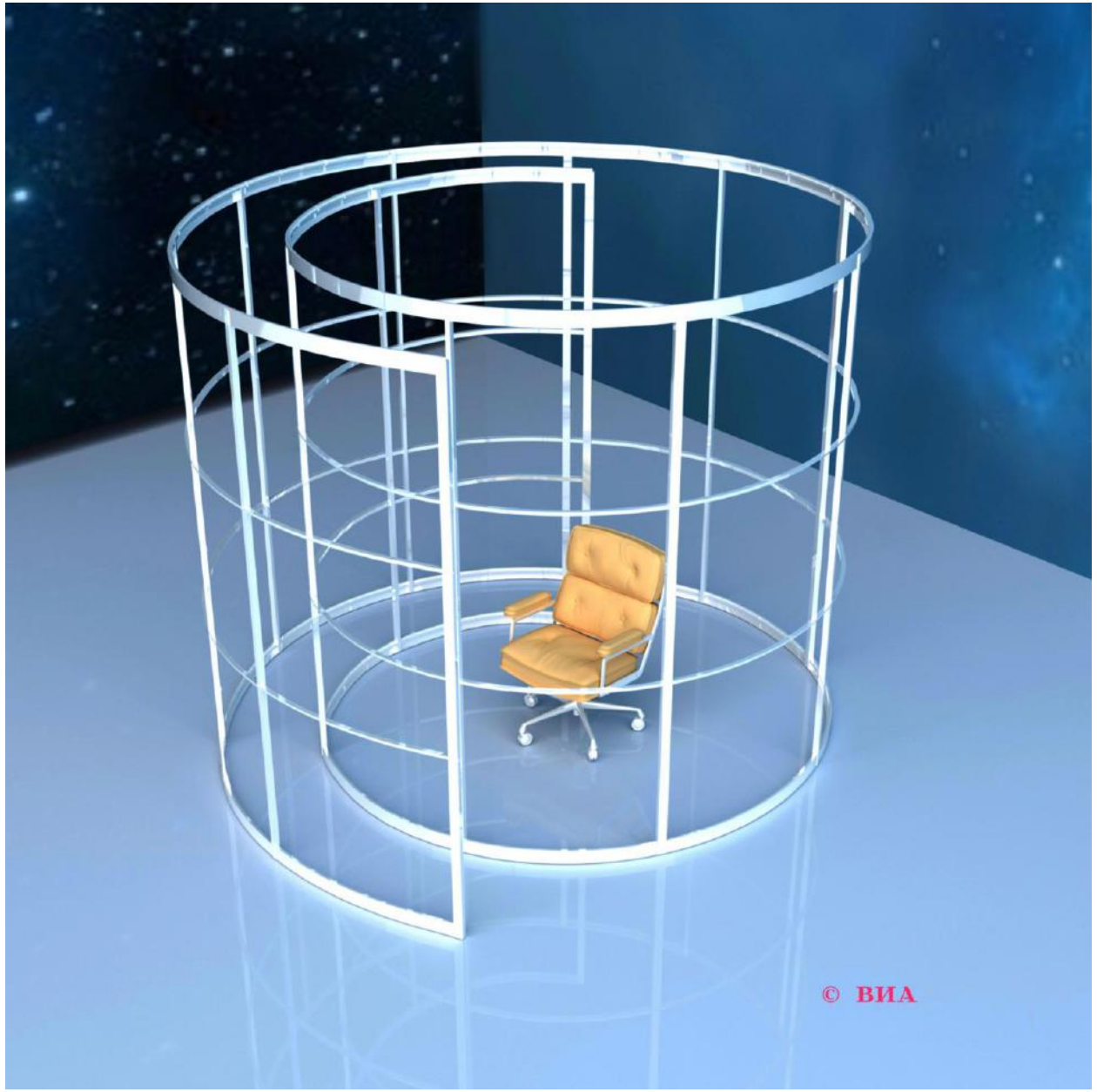
© ВИА

Mirrors Kozyrev used in scientific and experimental work is a device that forms a working space from aluminum plates 1.5 mm thick, up to 280 cm high, 120 cm wide, with a polished surface and with a curvature that provides the focus of the working surface and are interconnected in the form of a cylindrical or spiral reflective structure

Advantages of the proposed technology

1. **The use of this method makes it possible to *reach certain areas of the human body* where, with the traditional use of drugs access is difficult or impossible - the lymphatic system , the brain, the spinal cord, the skeletal system, the skin, and others**
2. **The possibility of using the medicine remotely without the introduction of the drug into the human body, which ensures the absence of adverse effects of the drug, absence of various allergic reactions and, most importantly*, prevents the formation of resistance to the different antimicrobial and antiviral drugs,* which is a very urgent problem today.**

Advantages of the proposed technology(2)

3. Significantly reduces the duration of therapy not only of its peculiarities, but also because of it is of a targeted nature: the organs and systems of the body are exposed separately
4. For Long-Covid syndrome, the author has developed a therapy algorithm that includes therapy with the proposed device of the organs involved into the process: lymphatic system, the brain, hypothalamus, spinal cord, spleen, etc
5. The only side effect of the therapy is weakness observed within 2-4 days after the therapy (78% of patients) and slight lightheadedness in the patients with brain exposure

Kaznacheev V.P., Kiselnikov A.A. and Mingasov I.F. (2005) Noo-spheric Ecology and Human Economics: Problems of the “Sphinx of the XXI Century. Novosibirsk,447 p. [in Russian].
Kaznacheev V.P. and Trofimov A.V. (2004) Essays on the Nature of Living Matter and Intelligence on Planet Earth: Problems of Cosmoplanet. Anthropo-ecology.In: Kaznacheev V.P. and Trofimov A.V., Eds., Science, 293-312. [in Russian]
https://www.koob.ru/kaznacheev_v_p/

GOOD BYE